Respo

USER MANUAL

Meet Respo.
Smart & eco-friendly ionized water system.

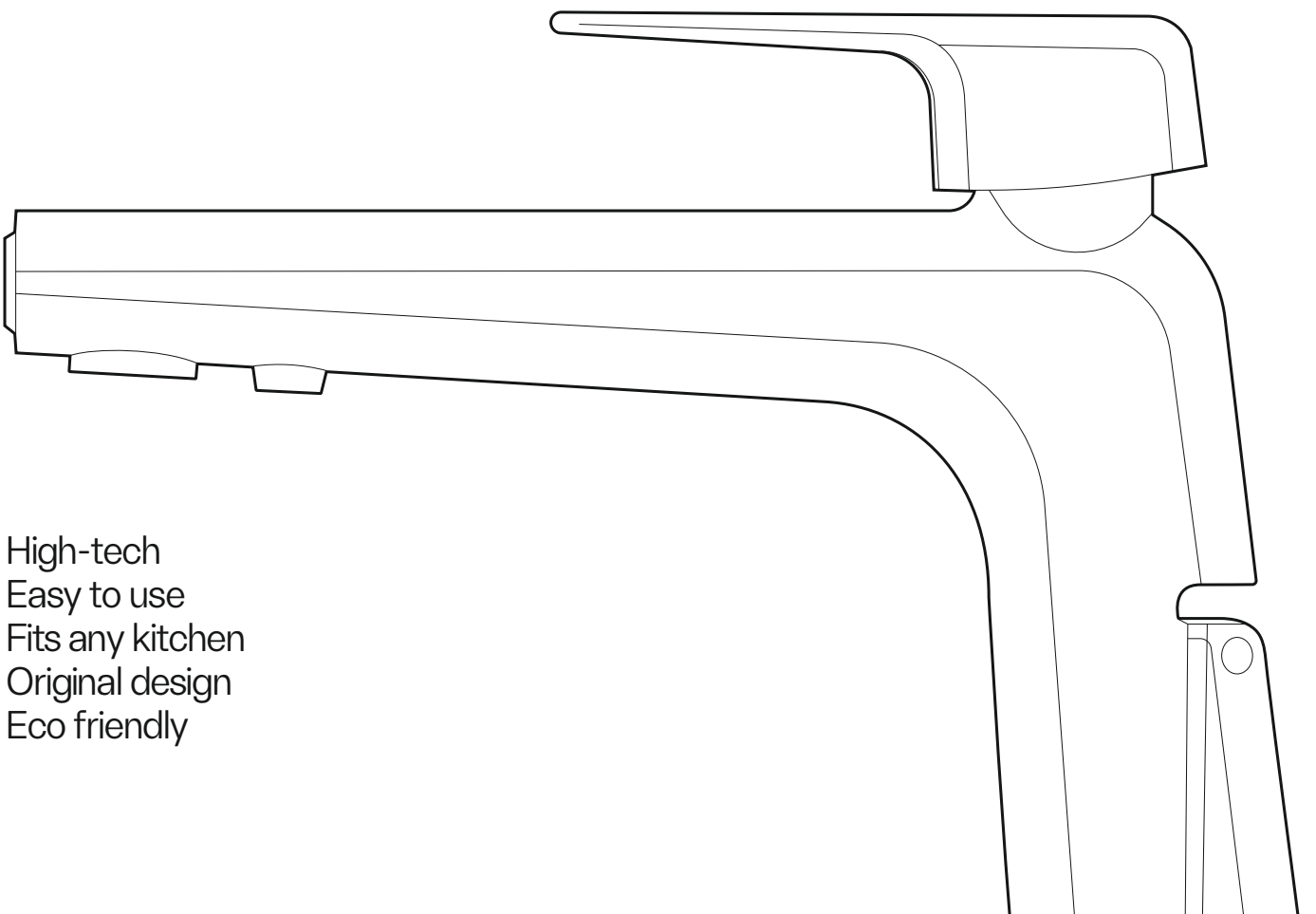

High-tech
Easy to use
Fits any kitchen
Original design
Eco friendly

RESPO WATER IONIZER USER MANUAL

Welcome to the Respo Smart Home Water System user manual. This guide is your go-to resource for setting up, installing, and operating your Respo water ionizer with an LCD faucet, ensuring you enjoy high-quality, ionized water in the comfort of your home.

Respo is dedicated to revolutionizing hydration, combining advanced technology with eco-conscious design to provide clean, mineral-enriched water that enhances well-being. Our goal is to empower you to make healthier choices while ensuring ease of access to pure, ionized water whenever you need it.

Respo seamlessly integrates into your lifestyle, offering more than just cleaner, tastier water. It allows for natural self-care, harmonizing with your daily routines and environmental concerns.

Upgrade to a smarter, healthier way of living with Respo. Elevate your water, elevate your life.

CONTENTS

1. Introduction to Respo Water Ionizer
Overview of Respo Water Ionizer and its benefits.

2. Safety Precautions
Important safety guidelines to ensure safe operation and usage of the water ionizer.

3. Key Features
Highlighting the main features and advantages of Respo Water Ionizer.

4. Technical Specifications
Detailed specifications including dimensions, power requirements, filtration capacity, and more.

5. Installation Instructions
Step-by-step guide for setting up and installing the Respo Water Ionizer.

6. Product Design and Appearance
Description of the water ionizer's design, materials, and aesthetic features.

7. Respo operation Overview
Explanation of the control panel layout and functions for easy navigation.

8. LCD Display Guide
Introduction to the LCD display interface and its indicators and messages.

9. Mineral Cartridge function
The Mineral Cartridge in the Respo Water Ionizer enhances water quality and health benefits by infusing essential minerals. It improves hydration, pH balance, and overall well-being.

10. Advanced Settings
Explanation of advanced features and settings for customization and optimization.

11. Maintenance and Cleaning
Tips and procedures for regular maintenance and cleaning to ensure optimal performance and longevity.

12. Troubleshooting Guide
Troubleshooting guide with solutions for common issues and problems.

13. Warranty and After-Sales Support
Information on warranty coverage and how to access after-sales support and service.

14. Frequently Asked Questions [FAQs]
Answers to commonly asked questions about Respo Water Ionizer and its usage.

15. Additional Resources
References, resources, and further reading materials for users seeking more information.

Please let us know if you need detailed information under each section, or if there are any specific aspects you would like to include in the manual.

1. Introduction to Respo Water Ionizer

The Respo Water Ionizer is a state-of-the-art appliance designed to transform ordinary tap water into clean, healthy, and ionized water. Using advanced electrolysis technology, the Respo Water Ionizer enhances the quality of your drinking water by adjusting its pH levels and providing antioxidant-rich alkaline water.

BENEFITS:

Improved Hydration
The Respo Water Ionizer produces ionized alkaline water, which is believed to be more easily absorbed by the body, thus promoting better hydration and overall well-being.

Alkalinity Regulation
By adjusting the pH levels of water, the Respo Water Ionizer allows users to enjoy water that is less acidic and more alkaline, which may help neutralize acidity in the body
and support a balanced internal pH.

Antioxidant Properties
Ionized alkaline water generated by the Respo Water Ionizer contains antioxidant properties, potentially aiding in the reduction of oxidative stress and free radical damage in the body.

Detoxification Support
The ionization process of the water may assist in detoxifying the body by flushing out harmful toxins and promoting cellular cleansing.

Enhanced Taste and Clarity
Respo Water Ionizer improves the taste, odor, and clarity of tap water, making it more palatable and refreshing to drink.

Environmental Sustainability
By opting for the Respo Water Ionizer, users can significantly reduce their reliance on bottled water, contributing to environmental conservation and the reduction of plastic waste.

Experience the convenience and benefits of having clean, ionized water readily available in your home with the Respo Water Ionizer. Say goodbye to bottled water and embrace a healthier hydration solution for you and your family.

2. Safety Precautions

The Respo Water Ionizer represents a cutting-edge solution for obtaining clean, ionized water with enhanced health benefits. However, it's essential to adhere to proper safety precautions to ensure the safe and effective operation of the device. Failure to follow these precautions may compromise the device's performance and safety, and in such cases, the warranty coverage may be affected. Therefore, it's crucial to familiarize yourself with the following safety guidelines and incorporate them into your usage routine:

Proper Power Supply
- Ensure to use the correct power outlet as specified in the user manual: AC 110 V 60 Hz [USA] / AC 230 V 50 Hz [Europe and some parts of Asia].
- Using improper voltage may void the warranty and pose risks of electric shock or fire.

Handling Power Cable
- If the supply cord is damaged, it must be replaced by the manufacturer, its service agent or similarly qualified persons in order to avoid hazard.
- Avoid bending, pulling, twisting, or bundling the power cord to prevent damage.
- Do not place heavy objects on the cord or clamp it, as this may lead to electric shock or fire hazards.
- Never use a damaged or loosely fitted power cord to avoid risks of electric shock, short circuits, or fire.
- Stapling the power cord is strictly prohibited as it can cause irreparable damage and potential fire hazards.

Plug Handling
- Connect or disconnect the power plug by holding the plug itself, not the cord, to prevent breakage, fire, or electric shock.
- Do not plug too many devices into one outlet to avoid overload and potential hazards.

Water Processing Operation
- Refer to the User Manual: Before using the water processor, carefully review the user manual provided by the manufacturer. It contains detailed instructions on how to operate the device safely and effectively. Make sure to understand each function and setting to utilize them properly.

- Use Functions as Intended: Each function and setting of the water processor serves a specific purpose. It's important to use them according to their intended function outlined in the user manual. Avoid using the device for purposes other than those specified by the manufacturer.

- Flushing Procedure: Before changing between different water modes, flush the water processor for at least 3 seconds to ensure that any residual water from the previous mode is cleared out. This helps prevent contamination and ensures the purity of the newly selected water mode.

- Avoid Tampering: Refrain from tampering with internal components or attempting to modify the operation of the water processor. Altering the device's operation can lead to safety hazards, malfunctions, or voiding of the warranty. Seek professional assistance if any modifications are required.

- Follow Safety Precautions: Adhere to all safety precautions provided in the user manual while operating the water processor. This includes proper handling of electrical components, avoiding exposure to water, and maintaining adequate ventilation around the device.

- Regular Maintenance: Perform routine maintenance tasks as recommended by the manufacturer to keep the water processor in optimal condition. This may include cleaning, filter replacement, and inspection of components. Neglecting maintenance can lead to performance issues or damage to the device.

By following these operational guidelines, users can ensure the safe and effective use of the water processor while maximizing its performance and longevity.

Water Flow Precautions
- Before first use or after prolonged periods of inactivity, run water through the machine for the specified duration to ensure proper functioning.
- Maintain adequate water flow during operation to prevent issues with water processing.

Chemical Handling [for Strong Acidic Water Production]
- Ensure proper ventilation when producing Strong Acidic Water to avoid prolonged exposure to vapors.
- Only use genuine electrolysis enhancer recommended by the manufacturer for Strong Acidic Water production.

Maintenance and Cleaning
- Follow the recommended maintenance schedule provided in the user manual.
- During cleaning procedures, ensure water flows freely and avoid drinking water produced during automatic cleaning.
- Use caution and follow instructions carefully when handling cleaning chemicals to prevent accidents or damage to the unit.

Component Replacement
- New hose sets supplied with the appliance must be used and old hose sets should not be reused.
- Use only genuine replacement parts recommended by the manufacturer to maintain product integrity and safety.
- Follow proper procedures for replacing filters, electrolysis enhancers, and other components to ensure safe and effective operation.

Emergency Situations
- In case of water leakage, power failure, or other emergencies, disconnect the power plug and contact your local dealer for assistance.
- Keep the unit away from water sources to prevent electrical hazards.

General Safety Practices
-This appliance can be used by children age from 8 years and above and parsons with reduced physical, sensory or mental capabilities or lack of experience and knowledge if they have been given supervision or instruction concerning use of the appliance in a safe way and understand the hazards involved.
- Children shall not play with the appliance. Cleaning and user maintenance shall not be made by child without supervision.
- Store the water ionizer and its accessories out of reach of children and pets to prevent accidental misuse or tampering.
- Avoid exposing the unit to extreme temperatures, direct sunlight, or excessive humidity, as these conditions can affect performance and longevity.
- Never attempt to repair or modify the water ionizer yourself, as this can result in electric shock, fire, or irreversible damage. Seek assistance from authorized service personnel for repairs and maintenance.

Important Safety Instructions
- Always unplug the ionizer immediately after use to minimize the risk of electrocution or damage.
- Place the unit on a stable and level surface to prevent tipping or falling.
- Keep the unit away from water sources such as bathtubs, sinks, or pools to avoid potential accidents or damage.
- Never insert foreign objects into any openings or hoses of the ionizer, as this can cause electric shock or damage to internal components.

Caution
- Practice caution when handling the water ionizer, especially during setup, operation, and maintenance procedures.
- Supervise the use of the ionizer around children or individuals requiring assistance to prevent accidents or misuse.
- Follow all instructions provided in the user manual for safe and proper operation of the unit.

Following these safety precautions will help ensure safe and effective use of the water process while minimizing risks to users and the surrounding environment.

To ensure safe operation and usage of the Respo Water Ionizer, please adhere to the following important safety guidelines:

SIGNAL MARKS:

SIGNAL MARKS	NAME	MEANING	EXPLANATION
	Alert	Attention required	Indicates a situation that requires immediate attention or action.
	Caution	Proceed with care	Advises users to proceed with caution, signaling a potential risk or issue that needs consideration.
	Error	Malfunction or failure	Indicates a problem or malfunction that needs to be addressed or resolved.
	Process take too long	Extended duration	Alerts users that a process is taking longer than expected and prompts for confirmation to continue.
	Not activated	Function or feature inactive	Indicates that a particular function or feature is not activated and may need to be enabled.
	The wash will start soon	Pre-wash notification	Informs users that the washing process will commence shortly, providing a heads-up.
	Close the filter	Close filter cover	Directs users to close the filter cover securely to ensure proper functioning.
	Change the filter	Replace filter	Indicates the need to replace the current filter with a new one for continued effectiveness.
	Change the mineral cartridge	Replace mineral cartridge	Alerts users to replace the mineral cartridge to maintain water quality and ionization.
	Wifi connection error	Connection issue	Notifies users of an error or problem with the WiFi connection, prompting further investigation.
	Confirmation	Action nonfirmation	Indicates a prompt requiring user confirmation or acknowledgment of a particular action or process
	Important	Key information	Designates important key information that is listed shortly for user attention.

These lists provide clear guidance on potential errors and warnings users may encounter while using the Respo Faucet LCD, allowing for prompt action and troubleshooting when necessary.

LCD ERROR CODE LIST:

CODE	NAME	MEANING
 #01	Water Flow Error	This error indicates a problem with water flow, which could be due to blockages, kinks in hoses, or issues with the water pump.
 #02	Transformer Overheating	This error indicates that the transformer, responsible for converting voltage, has exceeded safe temperature limits. It may be caused by prolonged use or insufficient ventilation.
 #03	Electronics Overheating	This error indicates that electronic components within the system have exceeded safe operating temperatures. It could be due to high ambient temperatures or a malfunctioning cooling system.
 #04	Water Leakage	This error indicates a leakage issue within the water system, which could lead to damage or malfunction if not addressed promptly. Check for leaks in hoses, fittings, or internal components.
 #05	Water Pump Malfunction	This error indicates a malfunction in the water pump, which is responsible for circulating water through the system. It may be caused by mechanical issues or electrical faults.
 #06	Fan Error	This error indicates an issue with the fan responsible for cooling electronic components. It could be due to a malfunctioning fan motor, obstruction in the airflow path, or electrical faults.
 #07	Filter Cover Issue	This error indicates a problem with the filter cover, which could prevent proper filtration and water flow. Check for misalignment, damage, or obstructions around the filter cover.
 #08	Mineral Cartridge Cover Issue	This error indicates a problem with the mineral cartridge cover, which could affect the mineralization process. Ensure the cover is properly secured and aligned with the cartridge.
 #09	Communication Error	This error indicates a communication issue between system components, which could be due to wiring issues, loose connections, or component failures.
 #10	Valve Error	This error indicates an issue with the valves controlling water flow within the system. It may be caused by blockages, malfunctions, or electrical faults in the valve mechanism.
 #11	Zero Cross Error	This error indicates an issue related to zero crossing detection, which is essential for synchronizing electronic components. It could be caused by electrical interference, component failures, or wiring issues.
 #12	Overvoltage Error	This error indicates that the system has detected a voltage surge or overvoltage condition, which could damage electronic components. It may be caused by power surges or faulty electrical systems.



If any of these errors appear on the screen of your Respo Smart Home Water System, refer to the user manual for troubleshooting steps. If you are unable to resolve the issue, contact Respo customer support for assistance. Avoid attempting to repair the device yourself unless you have the necessary qualifications and expertise.

3. Key Features

1. Multiple Ionization Modes: The Respo Water Ionizer offers a variety of ionization modes, including alkaline water, acidic water, purified water, and customizable settings. This versatility allows users to select their desired water pH levels and ionization strength according to their preferences and needs.

2. Cleaning Assistance: The Respo Water Ionizer comes equipped with a built-in cleaning assistance feature that guides users through the entire cleaning process. From initiating the cleaning cycle to providing step-by-step instructions on how to perform each cleaning task, the device ensures that users can maintain optimal performance with ease.

3. Timely Cleaning Alerts: The device automatically notifies users when it's time to initiate the cleaning process, eliminating the guesswork and ensuring that maintenance tasks are performed promptly. These timely alerts help prevent the buildup of residues and ensure the longevity of the device.

4. Adjustable pH Levels: Users can easily customize their preferred pH levels for quick access, allowing for convenient selection of water with different pH levels tailored to specific applications.

5. Intuitive LCD Display: The operation panel features a high-resolution LCD display screen that provides clear and easy-to-read information regarding the ionization process, water parameters, and system status. This user-friendly interface enhances usability and control over the device.

6. Sleep and Standby Functionality:
- Automatic LCD Sleep: The LCD display automatically goes to sleep after 60 seconds of inactivity, conserving energy and prolonging display lifespan.
- Standby Mode: After 2 minutes of inactivity, the device enters standby mode, reducing power consumption while remaining ready for operation.
- Wake-Up Feature: To awaken the device from sleep or standby mode, simply press any button on the ionizer, instantly resuming normal operation.
- Forced Sleep Activation:Users can manually activate the sleep function by pressing and holding the rectangle button for 3 seconds until the device enters sleep mode, providing additional energy-saving options.

7. Advanced Settings Menu: Accessible through the LCD display, the advanced settings menu offers customizable options for fine-tuning various parameters, including brightness adjustment, language selection, and Bluetooth connectivity. Users can personalize their experience for optimal convenience and comfort.

8. Filter Replacement Indicator: The Respo Water Ionizer includes a built-in filter replacement indicator that notifies users when it's time to replace the filter. This feature ensures consistent water quality and performance by prompting timely maintenance actions.

9. Safety Precautions: The device incorporates multiple safety features and precautions to ensure safe and reliable operation. These include proper power supply handling, plug safety measures, and emergency shutdown procedures in case of water leakage or system malfunctions.

10. Compact and Sleek Design: With its compact and sleek design, the Respo Water Ionizer seamlessly integrates into any kitchen or living space. The space-saving footprint and modern aesthetic enhance the overall appeal and functionality of the device.

11. Durable Construction: Constructed from high-quality materials, the Respo Water Ionizer is designed for durability and longevity. The robust build ensures consistent performance and reliability even under prolonged use.

12. Easy Installation and Maintenance: The device is designed for easy installation and maintenance, with intuitive setup procedures and straightforward filter replacement processes. Users can quickly set up the unit and perform routine maintenance tasks without hassle.

13. Comprehensive Warranty and Support: Backed by a comprehensive warranty and dedicated customer support, users can have peace of mind knowing that their investment is protected. The manufacturer offers prompt assistance and guidance to address any issues or concerns that may arise during use.

14. Scheduled Cleaning Alerts: The device features built-in reminders and notifications to indicate when it's time for routine cleaning. These alerts help users stay on top of maintenance schedules, ensuring optimal performance and longevity of the unit.

15. Guided Cleaning Process: The ionizer provides step-by-step guidance through the cleaning process, making it easy for users to perform maintenance tasks efficiently and effectively. Clear instructions on the LCD display or through audible prompts assist users throughout the cleaning procedure.

16. Automatic Cleaning Functionality: Some models of the Respo Water Ionizer may offer automatic cleaning functionality, allowing users to initiate cleaning cycles with the touch of a button. This hands-free approach streamlines the cleaning process and minimizes user intervention.

17. Maintenance Log: The device may also maintain a maintenance log, recording the date and time of each cleaning session for reference. This feature helps users track maintenance history and ensures compliance with recommended cleaning intervals.



The Respo Water Ionizer offers multiple ionization modes and customizable pH levels for tailored water preferences. Its built-in cleaning assistance and timely alerts simplify maintenance, ensuring optimal performance. Safety features, sleek design, and durable construction prioritize user safety and reliability. Easy installation, comprehensive warranty, and dedicated support enhance user experience. Scheduled cleaning alerts and automatic functionality streamline maintenance, promoting hassle-free operation. Ultimately, the Respo Water Ionizer delivers high-quality ionized water and simplifies maintenance for user satisfaction and well-being.

4. Technical Specifications

Electrode plates:	7
Plate size [mm]	129x52
Negative ORP [mV]*	-800
pH Range**	2.5 - 11.5
Generates	6 water types
Wattage [W]	450
Total weight [kg]	20
Dimensions HWD [mm]	380 x 147 x 345
Production rate [l/min]	Alcaline Water: 0.8 - 1.2 Filtered Water: 1.4 - 1.7 Mineralized Water: 1.4 - 1.7 Acidic Water: 0.4 - 0.7 Tap water: 4.5 - 7.6
The maximum inlet water pressure	500 kPa
The minimum inlet water pressure	150 kPa
Ease of Use	Fully automatic, very simple to operate
Languages	9
Warranty [years]	5

* Water ORP is influenced by factors such as flow rate and salinity. Variations in these factors can affect the oxidation-reduction potential [ORP] of water. Higher flow rates and lower salinity may result in different ORP levels compared to lower flow rates and higher salinity. Therefore, adjusting ORP requires considering these variables to achieve desired outcomes in water ionization processes.
** Water pH can vary based on initial flow rate and salinity. Adjusting pH properly requires considering these factors. High flow rate and low salinity may yield different pH levels compared to low flow rate and high salinity. Thus, regulating ionization must account for these variables.

1. Dimensions
- Height: 380 mm
- Width: 345 mm
- Depth: 147 mm

2. Weight
- Total Weight: 20 kg

3. Power Consumption
- Standby Power: 1 W
- Operating Power: 70-450 W

4. Voltage Requirements
- USA: AC 110 V 60 Hz
- Europe and Some Parts of Asia: AC 230 V 50 Hz

5. Water Input Pressure
- Minimum: 150 kPa
- Maximum: 500 kPa

6. Water Temperature Range
- Minimum: +5 C
- Maximum: +45 C

7. pH Range
- Alkaline Water: 11,5
- Acidic Water: 2,5

8. ORP [Oxidation-Reduction Potential] Range
- -800 - +900

9. Water Flow Rate
- Alkaline Water: 0,8 - 1,2 l/min
- Acidic Water: 0,4 - 0,7 l/min

10. Filter Lifespan
- 180 days

11. Electrode Material
- platinum/titanum

12. Electrode Plate Surface Area
- 68 cm2

13. Certifications
- CE

14. Warranty
- The Respo Water Ionizer comes with a comprehensive 5-year warranty, subject to specific requirements and conditions.

15. Additional Features
- [List any additional features not covered above]

5. Installation Instructions

INSTALLATION INSTRUCTIONS FOR RESPO WATER IONIZER

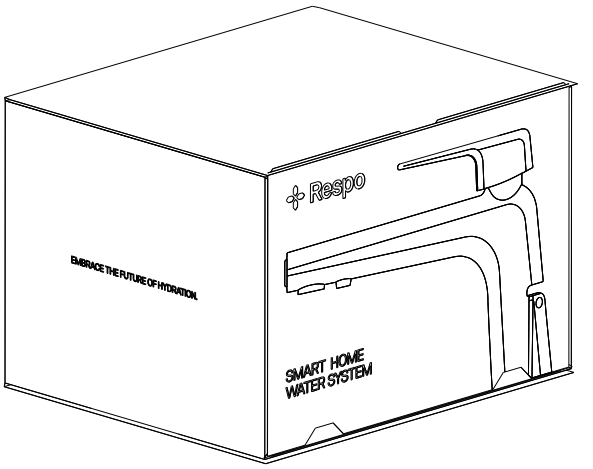

1. Unpacking the Boxes:
- Carefully unpack each box containing the Respo Water Ionizer and its components.
- Check that all parts listed in the box descriptions are included and accounted for.

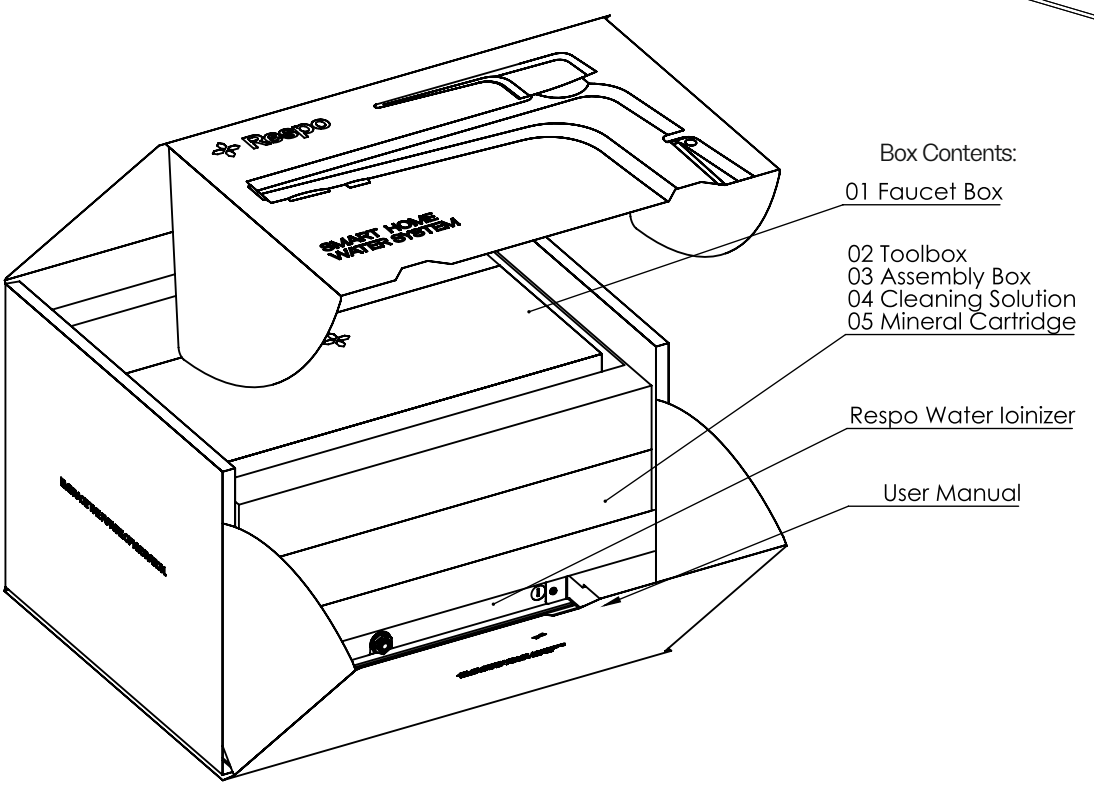

Box Contents:
01 Faucet Box
02 Toolbox
03 Assembly Box
04 Cleaning Solution
05 Mineral Cartridge
Respo Water Ionizer
User Manual

2. Selecting a Suitable Location:
- Plan and prepare the location where the Respo components [faucet and device] will be installed.
- Choose a location near a power outlet and water source with ample space for installation and operation.
- Ensure the area is well-ventilated and away from direct sunlight, heat sources, and excessive moisture.

3. Mounting Options:
- Decide whether to install the Respo Water Ionizer as a countertop or under-counter unit based on your preference and available space.
- Ensure the chosen location can accommodate the faucet unit and allow for easy access to plumbing and electrical connections.

4. Plumbing Connection:
- Use the tools provided in the Toolbox [02] to connect the water inlet hoses and fittings included in the Assembly Box [03] to the main water supply.
- Follow the instructions provided in the user manual for proper installation of the hoses and fittings, ensuring secure connections to prevent leaks.

5. Electrical Connection:
- Plug the power cord of the faucet unit, included in the Faucet Box [01], into a grounded electrical outlet.
- Ensure the outlet matches the voltage and frequency requirements specified in the user manual for safe operation of the ionizer.

INSTALLATION PROCESS USING INCLUDED TOOLS AND PARTS

By following these installation instructions carefully and utilizing the provided tools and components, you can ensure the proper setup and function of your Respo Water Ionizer for safe and efficient operation.

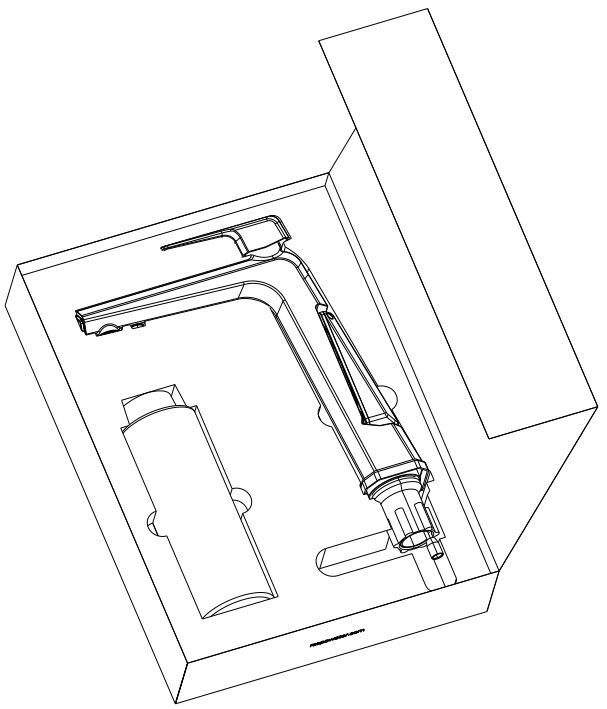

1. **Ø1 Faucet Box:** Unpack the mixer, including parts such as a metal collar, a rubber gasket, rubber O-ring, and a tightening plastic ring.

① Screw Driver [PH2]
② Pin Vise Drill
③ Pipe Cutter
④ Wrench [19 mm]
⑤ Gloves

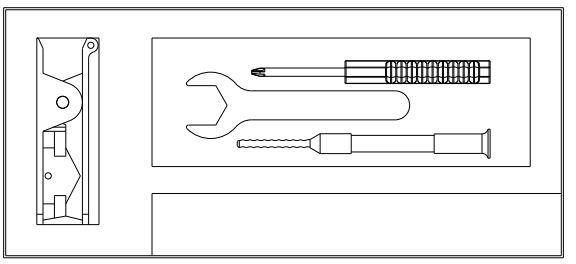

2. **Ø2 Toolbox:** Use the provided tools from the toolbox: Screwdriver, Pin Vise Drill, Pipe Cutter, 19mm Wrench, Gloves.

① Cold Water Hose
② Hot Water Hose
③ Pipe [¼]
④ Elbow Fitting
⑤ Waste Water Clamp
⑥ Pressure Reducer Valve
⑦ Water Adapter
⑧ ⅜ Hose Adapter ½

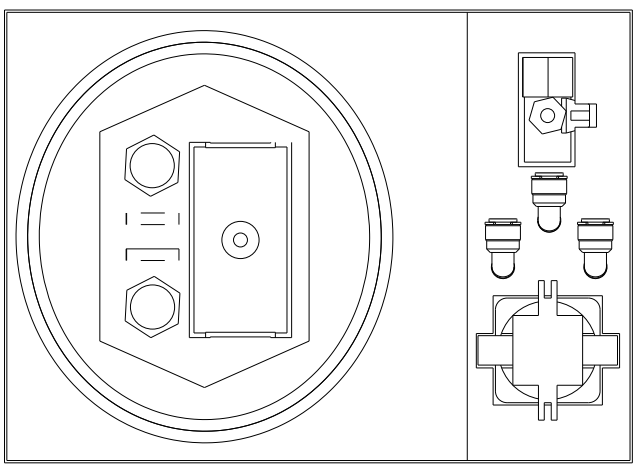

3. **Ø3 Assembly Box:** Access parts from the assembly box: Hoses [blue for cold water, red for hot water], ¼ inch white plastic pipe 5m, Elbow fitting, Waste Water Clamp, Pressure Reducer Valve, Water Adapter, 3/8 to ½ inch Hose Adapter.

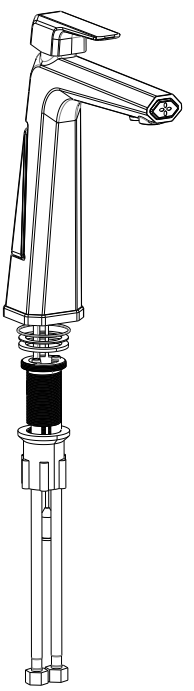

4. **Attaching the Hoses:** Screw the hoses onto the mixer according to the markings [red for hot, blue for cold]. Mount the mixer securely to the countertop or sink.

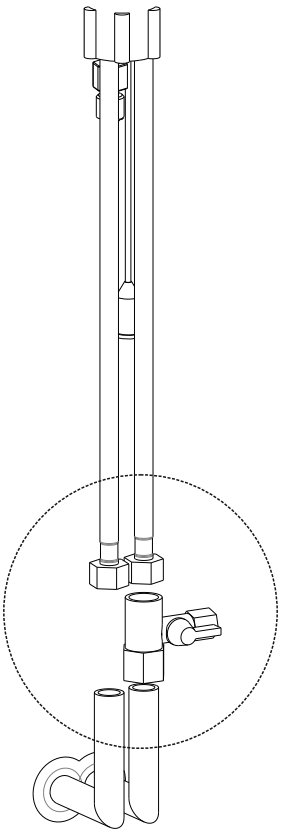

5. **Water Adapter:** Attach the Water Adapter to the cold water supply point. Connect the red hose to the hot water inlet and the blue hose to the cold water inlet where the Water Adapter is attached.

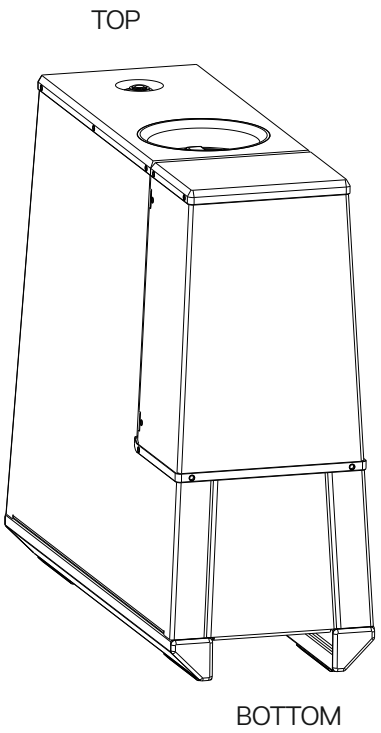

6. **Unpacking the Device:** Position the device with the filter part facing the installer. The inlet (for cold water supply) is on the bottom left, and the outlet (for waste water to the drain) is on the bottom right. The Respo Water output connection is on top of the device.

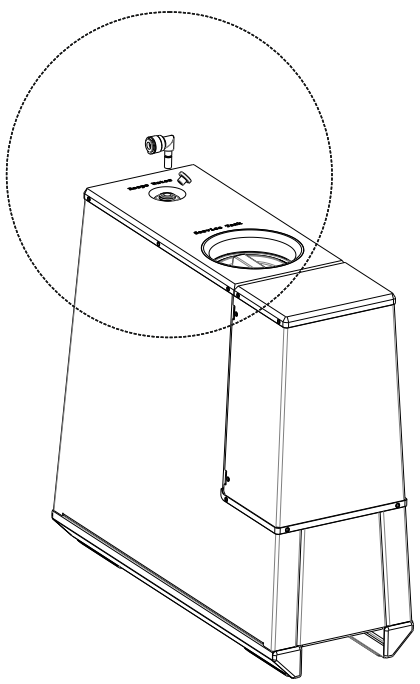

7. **Removing Plugs and Attaching Elbows:** Remove the plugs (3 pieces) from the quick connectors on the device. Attach quick connector elbows (3 pieces) to these places.

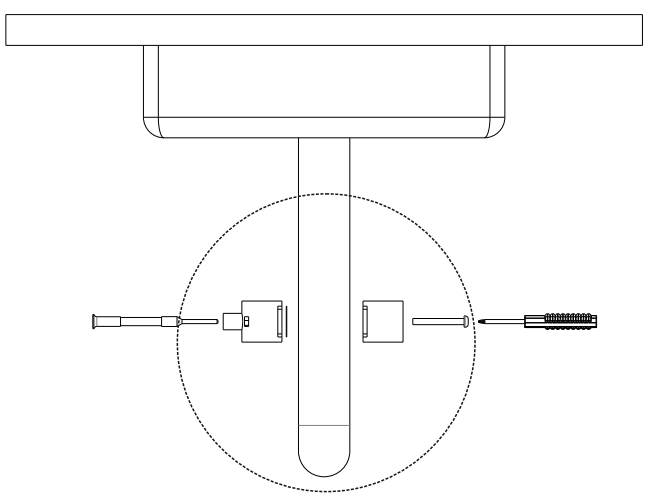

8. **Connecting to Drainage:** Take the Waste Water Clamp and mark where you will drill a 4mm hole in the siphon. Glue a gasket onto the siphon and screw the Waste Water Clamp securely onto it.

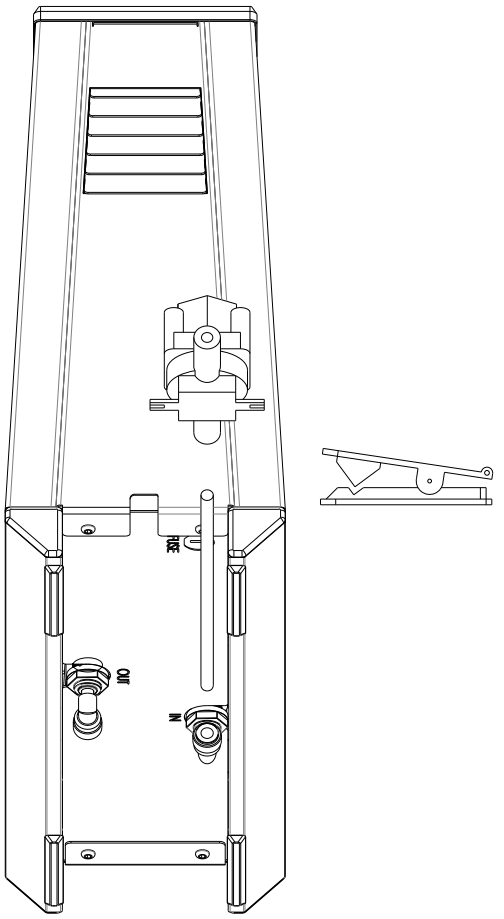

9. **Cutting and Connecting Hoses:** Use the Pipe Cutter to cut the white plastic pipe to the required length (about 20 cm from the device) to attach the Pressure Reducer Valve. The arrows on the Pressure Reducer Valve indicate the direction of water flow towards the device. Insert half-moon-shaped protective rings after fixing pipes.

10. **Placement Recommendation:** Install the device under the sink for optimal use.

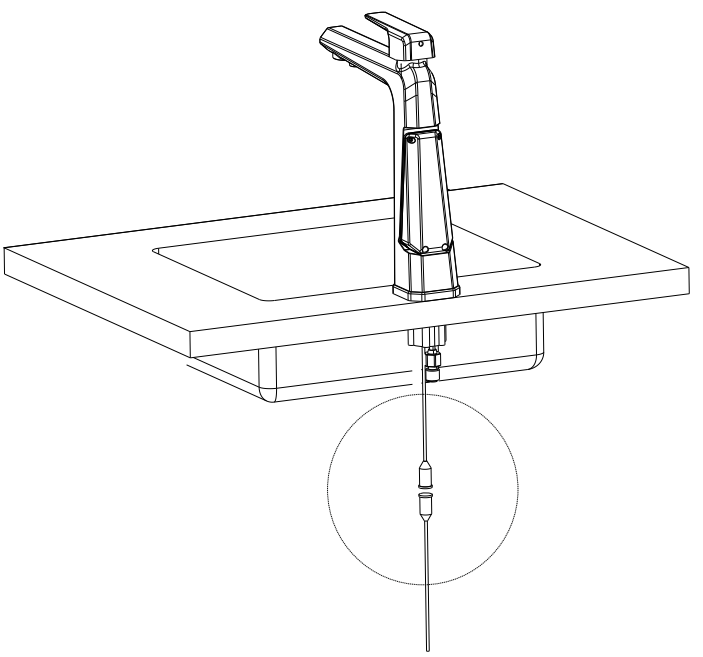

11. **Connecting Hoses:**
- Respo Water outlet --> Faucet ½ inch quick connection point.
- Waste water outlet --> Drain Waste Water Clamp ½ inch quick connection point.
- Inlet --> Pressure Reducer Valve --> Cold Water Adapter ½ inch quick connection point.

Note: Cut a ¼ inch plastic hose to the appropriate length for each connection position. Insert half-moon-shaped protective rings after fixing pipes.

12. **Connecting Signal Cables:** Connect the signal cable (M12) from the mixer to the device's signal cable (M12) and secure the connection by tightening the locking nut.

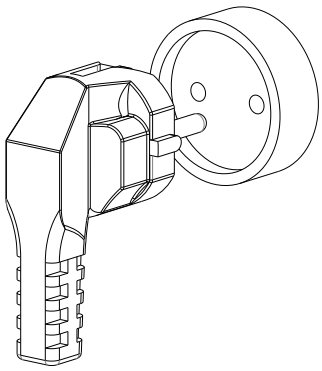

13. **Power Connection:** Plug the power cord into the electrical outlet.

14. **Testing Water Supply:** Turn on the water supply to the device and check for leaks before powering on the device.

6. Product Design and Appearance

The Respo Water Ionizer stands as a pinnacle of meticulous craftsmanship and thoughtful design, integrating high-quality materials, sustainability, and aesthetic appeal into its construction. Here's a cohesive overview of its design, materials, and visual attributes:

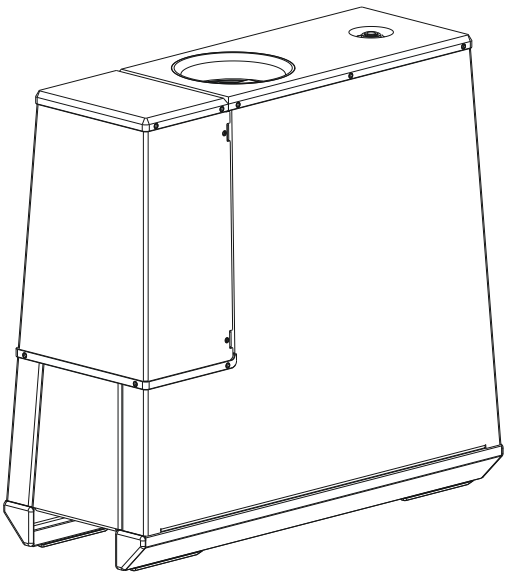

Stainless Steel Durability: Crafted with precision, the Respo Water Ionizer is encased in robust stainless steel, ensuring unparalleled durability and longevity. Stainless steel's innate resistance to corrosion and rust guarantees the ionizer maintains its pristine appearance and structural integrity throughout its lifespan. Moreover, the ease of cleaning and maintenance associated with stainless steel enhances hygiene and preserves the ionizer's aesthetic allure.

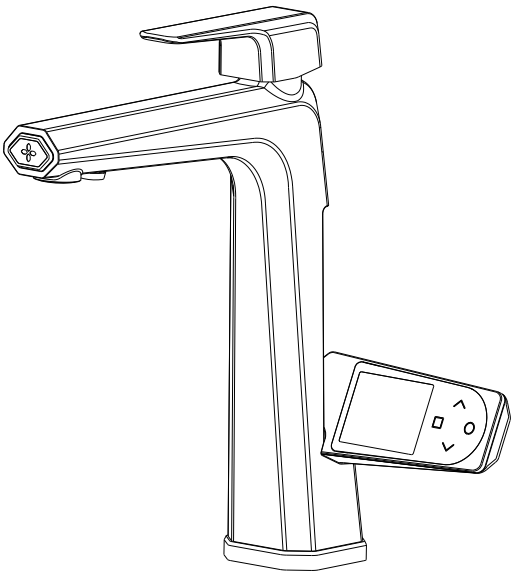

Elegant Brass Faucet: Complementing its stainless steel exterior, the ionizer features an elegant brass faucet, blending functionality with sophistication. Brass's exceptional resistance to corrosion and tarnishing makes it an ideal choice for water-related applications, ensuring reliable water dispensing while exuding timeless elegance. Furthermore, its recyclability underscores the ionizer's commitment to sustainability, minimizing environmental impact while adding a touch of luxury to the user experience.

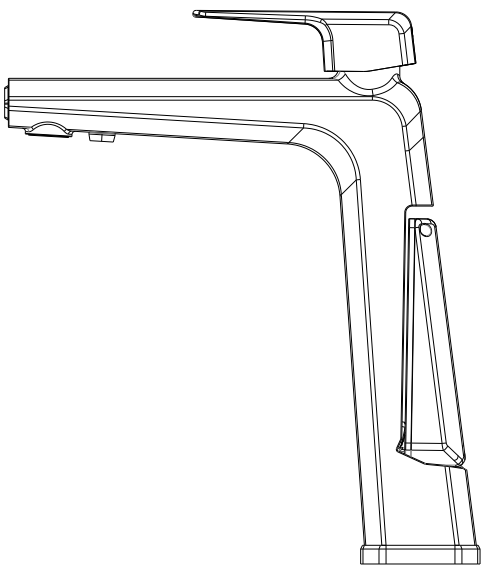

Modern Minimalism: Embracing a contemporary design ethos, the Respo Water Ionizer boasts modern minimalism that seamlessly integrates into any kitchen or home environment. Its clean lines, sleek contours, and streamlined silhouette exude understated sophistication, elevating the aesthetic ambiance of the space without overwhelming it. This minimalist approach to design enhances the ionizer's visual appeal, fostering a harmonious blend of form and function.

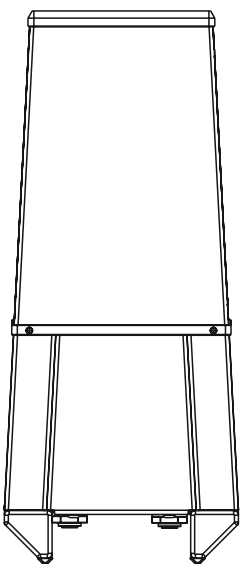

Space-Saving Efficiency: Despite its advanced functionality, the water ionizer embraces space-saving efficiency, making it an ideal addition to kitchens of all sizes. Its compact footprint and efficient use of space ensure versatile placement options, allowing for seamless integration into diverse kitchen layouts. Whether in a compact apartment or spacious home, the ionizer optimizes space utilization while delivering exceptional performance and water quality.

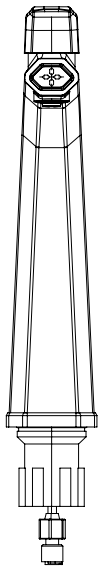

Sustainability in Construction: In alignment with eco-conscious values, the Respo Water Ionizer champions sustainability by incorporating recyclable materials into its construction. From the stainless steel casing to the brass faucet, each component embodies a commitment to environmental responsibility, minimizing waste and reducing the ionizer's carbon footprint. By prioritizing sustainable materials, the ionizer not only enhances durability and aesthetics but also contributes to a greener, more sustainable future.

The Respo Water Ionizer blends meticulous craftsmanship, durability, and elegance into a sleek design. Constructed with stainless steel for lasting durability and a brass faucet for timeless sophistication, it seamlessly fits into any kitchen with modern minimalism. Despite its advanced features, it maximizes space efficiency and prioritizes sustainability through recyclable materials. In essence, it offers sophistication, functionality, and environmental responsibility in one stylish package.

7. Respo operation overview

The operation panel of the Respo Water Ionizer is designed to provide users with intuitive control and access to a variety of features and settings. Here's an extended overview of the operation panel and its functionalities:

1. LCD DISPLAY SCREEN
The operation panel features a high-resolution LCD display screen that provides clear and easy-to-read information regarding the ionization process, water parameters, and system status.

2. TOUCH CONTROLS
The touch-sensitive control interface allows users to navigate through various settings and options with a simple touch, providing intuitive operation and user-friendly functionality.

3. WATER IONIZATION MODES
The operation panel offers six types of water ionization modes, providing alkaline water, acidic water, purified water, and customizable settings. This versatility allows users to select their desired water pH levels and ionization strength according to their preferences and needs. Users can choose from preset pH levels tailored for specific applications:

ACIDIC WATER:

3.5 pH - For Disinfection Water. This mode produces water with a pH of 3.5, ideal for disinfection purposes to eliminate harmful pathogens and bacteria effectively.

5.0 pH - For Beauty. With a pH of 5.0, this mode is specifically designed for beauty-related applications, such as skincare routines and hair care treatments.

6.5 pH - For Plants. This mode generates water with a pH of 6.5, which is optimal for watering plants and gardening purposes.

ALKALINE WATER:

8.6 pH - Drinking Water. With a pH of 8.6, this mode produces alkaline drinking water known for its potential health benefits.

11.0 pH - For Food. This mode delivers water with a pH of 9.5, suitable for various culinary applications and cooking processes.

Filtered Water. In addition to preset pH modes, users can access standard filtered water without specific pH adjustments, suitable for general hydration.

Water pH level of water can depend on several factors, including the initial water flow rate and its salinity. A high water flow rate and low salinity can affect the pH level, so it's important to consider these factors when adjusting the pH level properly. Water with a low flow rate and high salinity may have a different pH level than water with a high flow rate and low salinity. Therefore, it's important to take these factors into account when regulating the water ionization process.

4. ADJUSTABLE PH LEVELS
The Respo Water Ionizer offers the convenience of adjusting pH levels with quick access settings, allowing users to customize their preferred pH levels for quick access buttons.

Quick Access
Within the quick access settings, users can personalize their water pH preferences. By setting preferred pH levels for quick access buttons, users can easily select their desired pH settings with a simple press, providing instant access to water tailored to their specific needs.

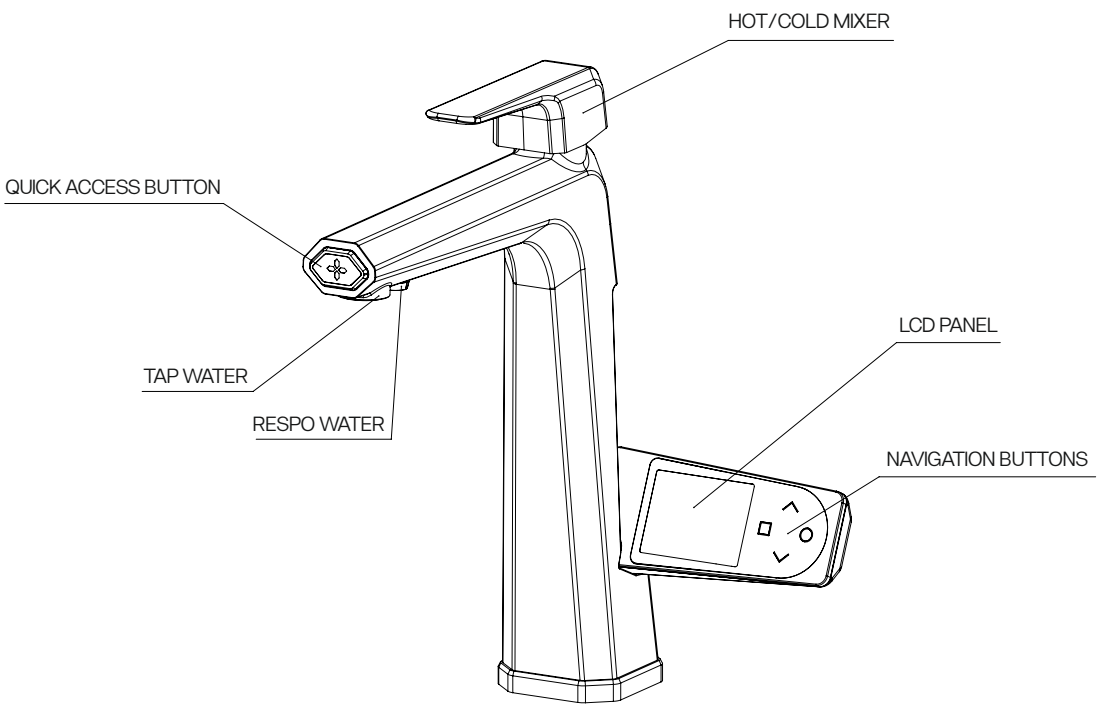

5. FILTER REPLACEMENT INDICATOR

The Respo Water Ionizer includes a convenient Filter Replacement Indicator as part of the Time to Service feature. This indicator helps users monitor essential maintenance information, ensuring optimal performance of the water ionizer system.

Time to Service

Within the Time to Service section, users can access vital maintenance information, including the Time to Filter Change. This feature displays the estimated remaining lifespan of the current filter before replacement is required.

6. SYSTEM ALERTS AND NOTIFICATIONS

The operation panel displays system alerts and notifications, such as low water pressure, filter change reminders, and maintenance alerts, keeping users informed about the status of the ionizer and any required actions.

7. AUTOMATIC CLEANING FUNCTION

Users can initiate the automatic cleaning function directly from the operation panel, ensuring hassle-free maintenance and upkeep of the ionizer to prevent mineral buildup and ensure optimal performance.

8. REAL-TIME MONITORING

The operation panel provides real-time monitoring of key water parameters, including pH levels, oxidation-reduction potential [ORP], and electrolysis settings, allowing users to track the ionization process and water quality continuously.

9. LANGUAGE SELECTION

The operation panel supports multiple language options, allowing users to select their preferred language for the display interface, enhancing accessibility and usability for users worldwide.

10. FIRMWARE UPDATES

The operation panel may support firmware updates, allowing users to easily download and install the latest software enhancements and feature upgrades to optimize the performance and functionality of the ionizer over time.

11. DIAGNOSTIC TOOLS

Some models of the Respo Water Ionizer may include diagnostic tools accessible from the operation panel, enabling users to identify and troubleshoot common issues quickly and effectively.

12. DATA SHARING WITH MANUFACTURER SERVER

The operation panel may feature a data sharing option that allows users to share diagnostic information and system performance data with the manufacturer server via a Wi-Fi connection. This feature enables proactive monitoring and remote troubleshooting, ensuring optimal performance and timely support for users.

13. SLEEP FUNCTION

To conserve energy and extend the lifespan of the display, users can activate the sleep mode by holding the square button for 3 seconds. This puts the device into sleep mode when not in use.

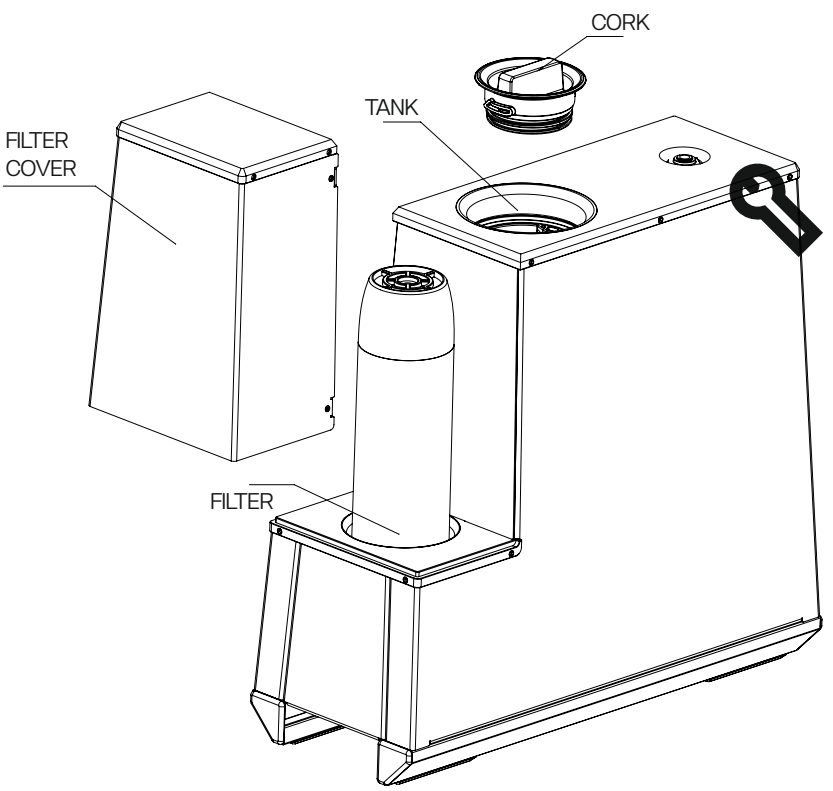

The Respo Water Ionizer's operation panel offers intuitive control and access to various features. With a high-resolution LCD display and touch-sensitive controls, users can easily navigate through six ionization modes, adjust pH levels, and monitor system status. Essential features like a filter replacement indicator and system alerts ensure timely maintenance. Automatic cleaning functions and real-time monitoring enhance convenience, while firmware updates and data sharing capabilities provide advanced functionality and support. Overall, the operation panel provides a user-friendly interface for maximizing the Respo Water Ionizer's functionality and convenience.

8. Lcd display guide

The LCD display on the Respo Water Ionizer provides an intuitive interface for navigating through various menu functions and accessing important settings. Here's an extended overview of the menu structure and its functionalities:

1. MAIN MENU FUNCTIONS

The main menu offers a selection of pH options tailored for different purposes:



3.5 pH - For Disinfection Water. Produces water with a pH of 3.5 suitable for disinfection purposes.

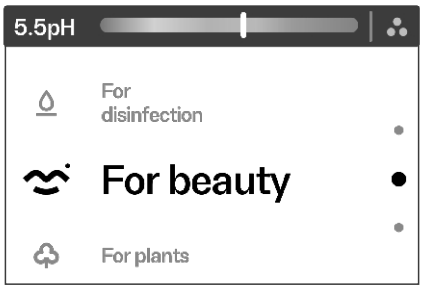

5.0 pH - For Beauty. Generates water with a pH of 5.0, ideal for beauty-related applications.

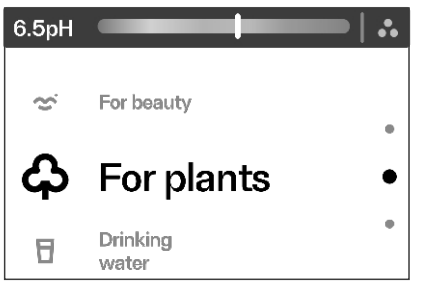

6.5 pH - For Plants. Designed for watering plants with water having a pH of 6.5.

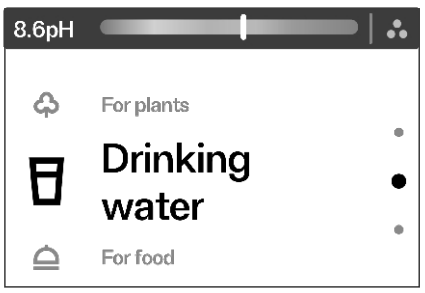

8.6 pH - Drinking Water. Produces drinking water with a pH of 8.6, offering alkaline properties.



11.0 pH - For Food. Provides water with a pH of 11.0, suitable for various food-related applications.

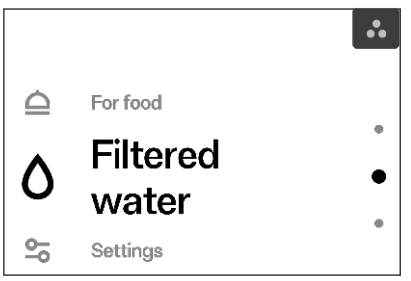

Filtered Water. Dispenses standard filtered water without specific pH adjustments.

2. SETTINGS MENU

Access the settings menu to configure various parameters and preferences:

2.1. TIME TO SERVICE

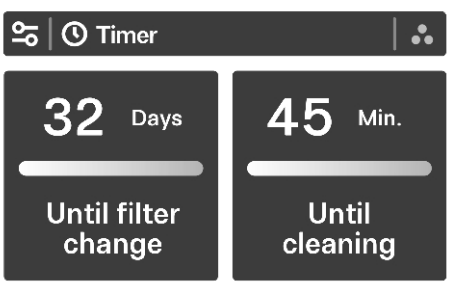

Time to Filter Change. Indicates the estimated remaining lifespan of the current filter.

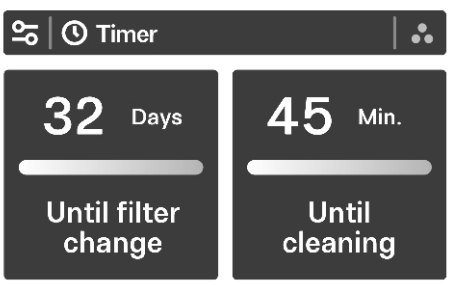

Time to Cleaning. Displays the next scheduled cleaning cycle for optimal device performance.

2.2. QUICK ACCESS

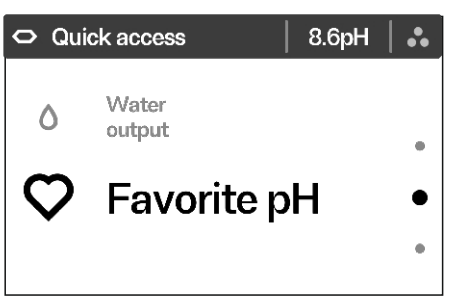

Water pH. Set preferred pH levels for quick access buttons.

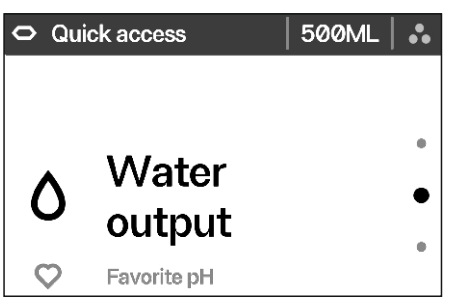

Water Output. Choose the volume of water to dispense with each use.

2.3. MAINTENACE



Mineralization Mode. Enable or disable mineralization mode.

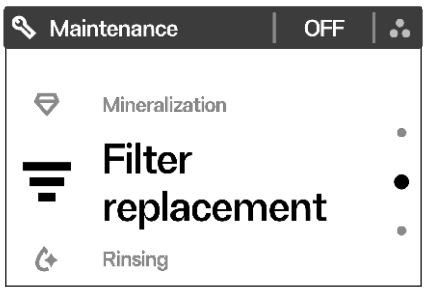

Filter Replacement. Mark the filter change to ensure timely replacements.

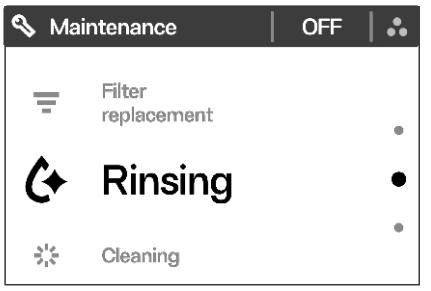

Rinsing. Initiate manual rinsing for cleanliness.

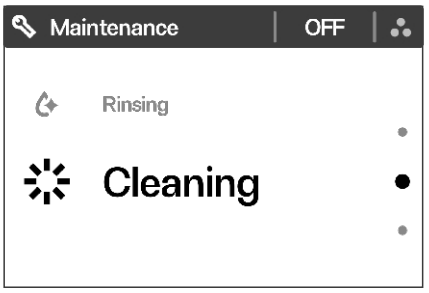

Cleaning. Trigger manual cleaning mode for residue removal.

2.4. SOUND

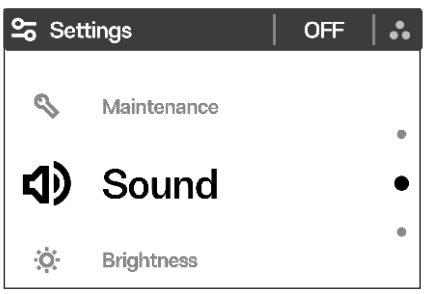

Customize sound effects on or off for user preference.

2.5. BRIGHTNESS

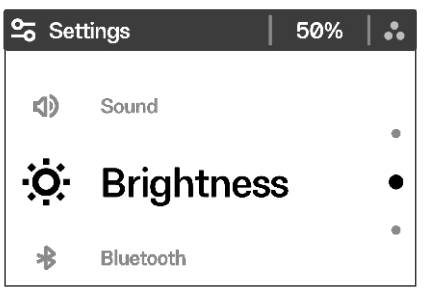

Adjust brightness levels from 0%, 25%, 75%, or 100% for optimal visibility.

2.6. BLUETOOTH

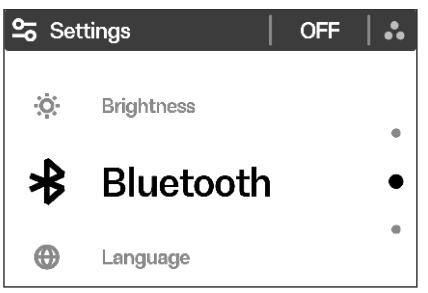

Bluetooth. Turn on Bluetooth to enable pairing with other devices.

2.7. LANGUAGE

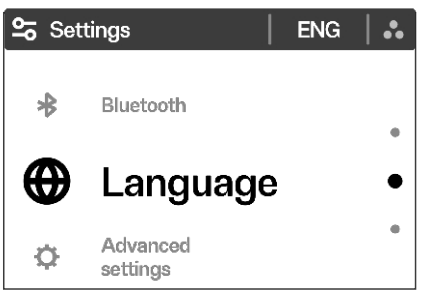

Select your preferred menu language for ease of use.

2.8. ADVANCED SETTINGS

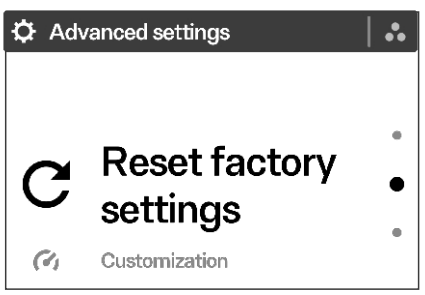

Reset Factory Settings. Restore all settings to factory defaults if needed.

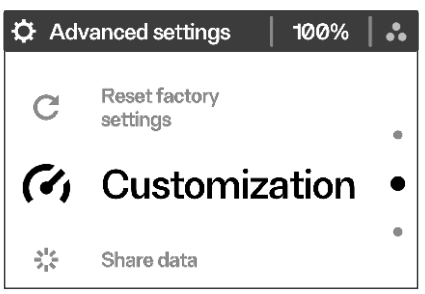

Customization. Adjust device performance based on water composition.

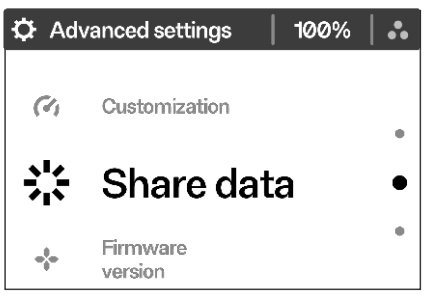

Share Data. Activate manual data sharing with the manufacturer for service and technology development.

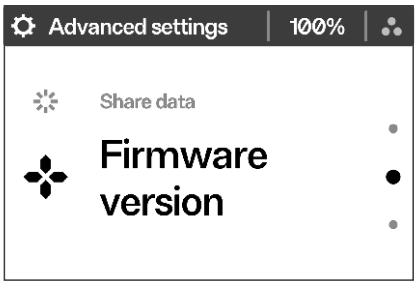

Firmware Version. Display installed firmware version for troubleshooting and compatibility.

The LCD display of the Respo Water Ionizer simplifies user interaction by offering intuitive menu navigation and customization options. Users can choose from preset pH options for various applications like disinfection, beauty, and drinking water, or opt for standard filtered water. The settings menu allows configuration of parameters such as filter lifespan, cleaning schedules, sound preferences, brightness levels, and language settings. Safety precautions, including avoiding water contact during menu navigation and adhering to maintenance instructions, ensure safe and effective use of the device.

9. Mineral cartridge function

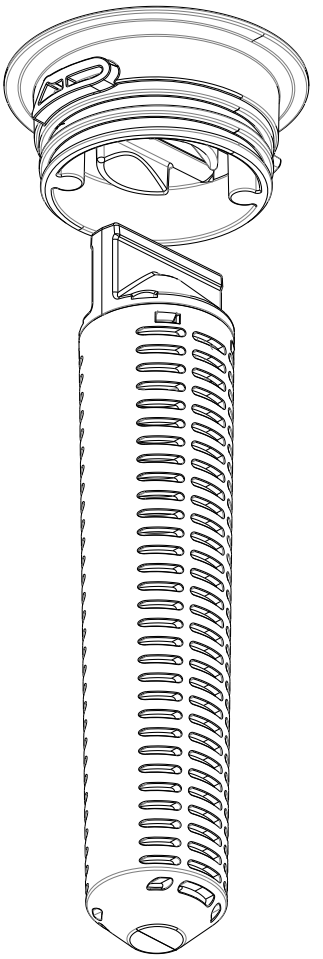

The Mineral Cartridge integrated into the Respo Water Ionizer plays a crucial role in enhancing the quality and health benefits of the ionized water produced by the device. By infusing essential minerals into the water, the Mineral Cartridge contributes to improved hydration, pH balance, and overall well-being. Here's a detailed overview of its functions:

1. Enhanced Water Solution.
- The Mineral Cartridge enhances the ionized water solution by infusing it with essential minerals, providing a balanced blend of electrolytes and trace elements that contribute to optimal hydration and health.

2. Mineral Enrichment.
- With the new MINERALISATION CASSETTE, users can complement the benefits of the ionizer by enriching the water with different mineral salts, such as calcium, magnesium, sodium, potassium, and more.
- Depending on the mineralization cartridge chosen, the ionized water can be tailored to meet specific mineral requirements and preferences.

3. Health Benefits.
- Minerals play a vital role in maintaining overall health and well-being, as each mineral has specific functions in the body and contributes to the smooth functioning of organs and physiological processes.
- By enriching the water with essential minerals, the Mineral Cartridge ensures that users receive the necessary nutrients and electrolytes to support various bodily functions and promote optimal health.

4. Customization Options.
- The Respo Water Ionizer offers flexibility in Mineral Cartridge selection, offering four different types of mineral cartridges to cater to diverse health needs and preferences.
- Users can choose from a range of mineralization cartridges, each designed to provide specific mineral compositions and concentrations in the ionized water, allowing for personalized customization.

5. Overall Well-Being.
- By incorporating essential minerals into the ionized water, the Mineral Cartridge contributes to overall well-being by promoting hydration, electrolyte balance, and nutrient intake.
- Regular consumption of mineral-enriched ionized water can support various aspects of health, Including hydration, digestion, metabolism, and immune function.

In summary, the Mineral Cartridge function of the Respo Water Ionizer is essential for enhancing the quality and health benefits of ionized water. By enriching the water with essential minerals, users can enjoy improved hydration, pH balance, and overall well-being, tailored to their specific health goals and preferences.
The Respo Water Ionizer offers an advanced Mineral Cartridge system designed to provide users with a customizable and enriching water ionization experience. By incorporating specialized mineral balls, users can tailor their ionized water to meet specific health goals and preferences. Here's a detailed look at the components of the Extended Mineral Cartridge theme:

Hydrogen ORP Ball Plus
This specialized mineral ball is engineered to enhance the antioxidant properties of ionized water by increasing its molecular hydrogen content. Molecular hydrogen acts as a powerful antioxidant, helping to reduce oxidative stress and support overall health and well-being.

Potassium Ball
The potassium ball releases potassium ions into the ionized water, contributing to its alkalinity and providing essential electrolytes for hydration and cellular function. Potassium is crucial for cardiovascular health, muscle function, and nerve transmission.

Tourmaline Ball [Calcium, Iron, Magnesium, Boron]
The tourmaline ball contains a blend of essential minerals, including calcium, iron, magnesium, and boron. These minerals are vital for bone health, blood oxygenation, muscle function, and metabolism regulation, promoting optimal hydration and mineral balance.

Maifan Ball [Calcium, Sodium, Magnesium, Iron, Zinc, Selenium]
The maifan ball enriches ionized water with a comprehensive spectrum of trace minerals, including calcium, sodium, magnesium, iron, zinc, and selenium. These minerals play critical roles in mmune function, enzyme activity, tissue repair, and antioxidant defense, supporting overall health and vitality.

Customization Options
Users have the flexibility to customize their Mineral Cartridge configuration to adjust the mineral composition and concentration in the ionized water according to their individual preferences and health goals. With four different types of mineral cartridges to choose from, users can tailor their water ionization experience to meet their unique needs.

By exploring the advanced settings and extended mineral cartridge theme of the Respo Water Ionizer, users can unlock a wealth of customization options to optimize their ionized water experience and promote enhanced health and well-being. Whether seeking antioxidant support, electrolyte replenishment, or overall mineral enrichment, the Respo Water Ionizer offers a personalized solution for every user.

10. Advanced settings

The Respo Water Ionizer is equipped with advanced features and settings that allow users to customize and optimize their ionization experience. Here's an in-depth look at these advanced functionalities:

1. pH Calibration
Fine-tune the pH levels of the ionized water to meet your specific preferences and requirements. Adjustments can be made within a precise range to achieve the desired alkalinity or acidity for various applications.

* For advanced settings like pH calibration, please note that users need to contact customer support for assistance in utilizing this function effectively.

2. ORP Adjustment
Control the Oxidation-Reduction Potential [ORP] of the ionized water to enhance its antioxidant properties. By adjusting the ORP levels, users can optimize the water's ability to neutralize free radicals and promote overall health and well-being.

3. Wi-Fi Connectivity
Seamlessly connect the ionizer to your home Wi-Fi network to record and analyze data. By leveraging Wi-Fi connectivity, users can access comprehensive usage statistics, monitor water quality metrics, and receive real-time notifications for enhanced convenience and peace of mind.

4. Water Consumption Tracking
Keep track of your daily water consumption with the built-in tracking feature. The ionizer monitors and logs water usage over time, providing valuable insights into hydration habits and encouraging healthy hydration practices.

5. Mobile App Integration
Enhance your ionization experience with the dedicated mobile app designed for the Respo Water Ionizer. The app offers a user-friendly interface for remote control, data visualization, and personalized settings adjustment, enabling seamless integration with your smart devices for a more intuitive and convenient user experience.

6. Timer Settings
Set timers for automatic shut-off or interval-based operation to conserve energy and optimize efficiency. Users can program the ionizer to operate for specific durations or at scheduled times to align with their usage patterns and preferences.

7. Memory Function
Save customized settings and preferences for quick and easy access in the future. The ionizer's memory function ensures that your preferred configurations are retained even after powering off or unplugging the device.

8. Language Selection
Choose from a variety of languages to customize the interface for users of different linguistic backgrounds. The language selection feature enhances accessibility and user-friendliness, catering to a diverse user base.

9. Data Logging
Access detailed logs and records of water ionization sessions for monitoring and analysis. The data logging functionality provides insights into usage patterns, water quality metrics, and system performance over time.

10. Bluetooth Connectivity
Connect the ionizer to external devices such as smartphones or tablets via Bluetooth for enhanced control and monitoring. Bluetooth connectivity enables seamless integration with smart home systems and remote management capabilities.

By utilizing these advanced settings, users can fine-tune their ionization experience to meet their unique preferences and requirements. Whether it's adjusting pH levels, monitoring water consumption, or accessing usage data through the mobile app, the Respo Water Ionizer

11. Maintenance and cleaning

Proper maintenance, diagnostic monitoring, and data sharing are integral aspects of ensuring the longevity and optimal performance of your Respo Water Ionizer. This section covers routine maintenance procedures, advanced diagnostic capabilities, and data sharing functionalities. In addition to routine maintenance tasks, it's essential to address specific issues promptly. If you notice a reduced flow or observe that the aerator is clogged with limestone deposits, it's recommended to initiate manual cleaning immediately. Follow the manual cleaning procedures outlined in the user manual to ensure optimal performance and longevity of your water processor.

1. DIAGNOSTIC MONITORING

The Respo Water Ionizer continuously monitors key parameters and detects errors or anomalies in operation:

- **Continuous Monitoring.** Monitors water flow rate, pH levels, electrolysis performance, and filter status.
- **Error Detection.** Logs errors such as low water pressure, filter saturation, or electrical malfunctions.
- **Alert System.** Generates alerts via the LCD display or mobile app to prompt timely action.

2. DATA SHARING AND REMOTE SUPPORT

The ionizer can communicate with the manufacturer's server via WiFi for remote diagnostics and support:

- **Data encryption.** Diagnostic data transmitted is encrypted to ensure privacy.
- **User consent.** * Users have control over data sharing preferences.

3. USER PRIVACY AND SECURITY

Data sharing prioritizes user privacy and security:

- **Automatic Data Upload.** Diagnostic data is uploaded automatically to the server.
- **Remote Troubleshooting.** Authorized technicians can access diagnostic data for remote support.
- **Firmware Updates.** Firmware updates can be delivered remotely to enhance functionality.

By adhering to routine maintenance procedures, leveraging diagnostic monitoring capabilities, and utilizing data sharing functionalities, you can optimize the performance and reliability of your Respo Water Ionizer while ensuring a seamless user experience.

12. Troubleshooting Guide

Encountering issues with your Respo Water Ionizer can be frustrating, but with this comprehensive troubleshooting guide, you can quickly diagnose and resolve common problems to ensure uninterrupted access to high-quality ionized water.

A. Power and Functionality Issues.
A.1. Device Not Powering On
- Check the power outlet and ensure it is functional. Test with another device.
- Inspect the power cord for damage or loose connections. Contact service if needed.

A.2. LCD Display Not Functioning:**
- Confirm power source and check if the device is receiving power.
- Examine the LCD connection cable to ensure it is not damaged. Contact customer support if necessary.
- Reset the device by unplugging it for a few minutes and then plugging it back in.

B. Water Quality and Flow Issues:
B.1. Low Water Flow
- Check water inlet hoses for blockages or kinks. Clear any obstructions.
- Ensure all necessary valves are open.
- Replace filters if clogged. Ensure adequate water pressure for proper function.

B.2. Strange Taste or Odor in Water:**
- Flush the ionizer with clean water to remove residues.
- Replace filters if old or saturated. Clean electrolysis chamber.
- Check the drains for any issues.

C. Functional and Operational Issues:
C.1. Error Codes or Warnings on LCD Display:**
- Consult user manual for error code explanations and troubleshooting steps.
- Follow recommended procedures or contact support for assistance.

C.2. Inconsistent Ionization Performance:**
-Test pH and ORP levels with a separate kit. Clean electrolysis chamber if needed.
- Ensure water quality meets recommended standards.

D. Connectivity and Data Sharing Issues:
D.1. WiFi Connection Problems:**
- Check WiFi network and ionizer settings. Restart both devices.
- Reconfigure WiFi settings if necessary.

D. 2. Data Sharing Errors
- Ensure ionizer is connected to the manufacturer's server with correct settings.
- Update firmware or software as needed. Contact support for further help.

E. Safety and Emergency Procedures:
E.1. Water Leakage or Spillage
- Turn off the main water supply and unplug the ionizer.
- Clean up spills and inspect for damage.

E.2. Servicing the Device
- For filter change: Open the cover, twist the filter to disconnect, avoid spillage, add the new filter, twist it until it clicks.
- For cleaning: Add pure cleaning solution to the tank, open tank cork to access the tank, pour the cleaning solution from the manufacturer, pour all 400ml bottle inside, check for overfill, run cleaning mode, wait for finish before use.
- For mineral cartridge: Open tank cork to access the tank, cork has fixer to put fix mineral cartridge, close cork which is holding mineral cartridge to the tank, close it tightly.

E.3. Electrical Malfunctions or Hazards
- Disconnect power and discontinue use if sparks, smoke, or unusual noises occur.
- Seek professional electrician assistance. Do not attempt repairs yourself.

F. Advanced Troubleshooting and Support

F.1. Factory Reset

- Perform a factory reset as a last resort. This option can typically be found within the Advanced Settings subsection. Refer to the user manual for detailed instructions on how to execute a factory reset, and follow the steps carefully to avoid unintended consequences.

F.2. Technical Support and Service

- Contact customer support with detailed information about the issue.
- Consider professional servicing if troubleshooting fails.



With this troubleshooting guide, you can effectively address various issues with your Respo Water Ionizer, ensuring continued access to clean, ionized water. For any challenges beyond your expertise, reach out to our dedicated customer support team for prompt assistance and resolution.

13. Warranty and After-Sales Support

Congratulations on your purchase of the Respo Water Ionizer! We stand behind the quality and performance of our product and are committed to providing exceptional after-sales support to ensure your satisfaction. This section outlines the warranty coverage and after-sales services available to you as a valued customer.

A. Warranty Coverage

A.1. Limited Warranty
- Respo warrants the Respo Water Ionizer to be free from defects in materials and workmanship under normal use and service for a period of 5 years from the date of purchase.
- This warranty is non-transferable and applies only to the original purchaser of the ionizer from an authorized Respo retailer or distributor.
- Proof of purchase may be required to validate warranty claims. Please retain your purchase receipt or invoice for this purpose.

A.2. Coverage Details
- During the warranty period, Respo will, at its discretion, repair or replace any defective parts or components of the ionizer free of charge.
- The warranty covers manufacturing defects and malfunctions arising from normal use, but does not extend to damage caused by misuse, neglect, unauthorized repairs, or alterations.
- Consumable components such as filters and electrolysis enhancers are not covered under warranty and may require periodic replacement as part of routine maintenance.

B. Warranty Claims Process

B.1. Initiating a Warranty Claim
- In the event of a defect or malfunction covered by the warranty, please contact Respo Customer Support to initiate a warranty claim.
- Provide detailed information about the issue, including the nature of the problem, any error codes or warning messages displayed, and the date of purchase.
- Our customer support team will guide you through the warranty claims process and provide instructions for returning the ionizer for repair or replacement if necessary.

B.2. Return and Repair Procedure
- If repair or replacement is deemed necessary, Respo will provide instructions for returning the ionizer to our authorized service center.
- Please securely package the ionizer to prevent damage during transit and include a copy of the original purchase receipt or invoice with the return shipment.
- Upon receipt of the defective unit, Respo will promptly assess the issue and perform the necessary repairs or replacements to restore the ionizer to full functionality.

C. After-Sales Support and Assistance

C.1. Technical Support
- Our knowledgeable technical support team is available to assist you with any questions or concerns you may have regarding the operation or maintenance of your Respo Water Ionizer.
- Contact us via phone, email, or live chat for prompt assistance during regular business hours.

C.2. Product Registration
- Register your Respo Water Ionizer online to activate your warranty and receive important product updates, notifications, and special offers.
- Product registration also helps us expedite warranty claims and provide personalized support to meet your needs.

D. Additional Information

D.1. Limitations and Exclusions
- This warranty is void if the ionizer has been subjected to misuse, abuse, negligence, accident, or unauthorized modifications.
- Respo reserves the right to refuse warranty service if the ionizer has been tampered with or repaired by unauthorized persons.

D.2. Legal Rights
- This warranty gives you specific legal rights, and you may also have other rights that vary from state to state or country to country.
- Some jurisdictions do not allow limitations on how long an implied warranty lasts or the exclusion or limitation of incidental or consequential damages, so the above limitations or exclusions may not apply to you.



At Respo, we are committed to providing superior products and exceptional customer service. We believe in the quality and reliability of our Respo Water Ionizer, and our warranty and after-sales support reflect this commitment. Should you encounter any issues or require assistance, please don't hesitate to reach out to us. We're here to help ensure your satisfaction and continued enjoyment of clean, ionized water for years to come.

14. Frequently Asked Questions [FAQs]

1. What is a water ionizer, and how does it work?
A water ionizer is a device that alters the pH level of water through electrolysis, typically producing alkaline and acidic water streams. This process involves splitting water molecules into ions, resulting in alkaline ionized water [with a higher pH] and acidic ionized water [with a lower pH].

2. What are the health benefits of drinking ionized water?
Ionized water is believed by some to offer potential health benefits, including improved hydration, antioxidant properties, and potential alkalizing effects on the body. However, scientific research on these claims is ongoing, and individual results may vary.

3. How often should I replace the filters in my Respo Water Ionizer?
Filter replacement frequency depends on factors such as water quality and usage patterns. It's generally recommended to replace filters every 6 to 12 months to maintain optimal water quality and performance. Refer to the user manual for specific replacement intervals and procedures.

4. Can I use ionized water for cooking and brewing beverages?
Yes, ionized water can be used for cooking, brewing beverages, and various culinary applications. Ensure that the water quality meets your standards and that the pH level is suitable for your intended use. Avoid using ionized water for recipes where specific pH levels are critical or where flavor may be affected.

5. Is ionized water safe for pets and plants?
Ionized water is generally safe for pets and plants, but introduce it gradually and monitor for any adverse reactions. Some plants may respond differently to changes in water pH, so start with small amounts and observe the results. Consult with a veterinarian or horticulturist for specific guidance.

6. Can I adjust the pH level of the ionized water produced by the Respo Water Ionizer?
Yes, most Respo Water Ionizer models offer adjustable pH settings, allowing customization of water alkalinity and acidity to suit preferences. Consult the operation manual for instructions on adjusting pH levels and selecting different water types.

7. How do I clean and maintain my Respo Water Ionizer?
Proper maintenance is crucial for longevity and performance. Follow the cleaning and maintenance guidelines provided in the user manual, including descaling, filter replacement, and exterior cleaning. Avoid using harsh chemicals that may damage the unit.

8. Can I use ionized water for household cleaning purposes?
Yes, ionized water's alkaline properties make it effective for various household cleaning tasks, such as surface cleaning, window washing, and floor mopping. Experiment with different pH levels to find the most suitable cleaning solution for your needs.

9. Is it normal for my Respo Water Ionizer to make noise during operation?
Some noise during operation, such as water flow or electrolysis, is normal. However, excessive noise or unusual sounds may indicate an issue that should be addressed promptly. Refer to the troubleshooting section of the user manual for guidance.

10. Where can I purchase replacement parts and accessories for my Respo Water Ionizer?
Replacement parts, filters, and accessories can typically be purchased from the manufacturer's website, authorized dealers, or service centers. Ensure that you use genuine parts to maintain optimal performance and warranty coverage.

11. How does the Respo Water Ionizer compare to other ionizer brands on the market?
The Respo Water Ionizer is designed with advanced technology and high-quality materials to deliver exceptional water ionization performance. Its customizable settings, durability, and userfriendly features set it apart from other brands, providing users with superior water quality and convenience.

12. What is the lifespan of a Respo Water Ionizer?
The lifespan of a Respo Water Ionizer depends on various factors, including usage patterns, maintenance practices, and water quality. With proper care and maintenance, the ionizer can last for many years, providing consistent performance and high-quality ionized water.

13. Can the Respo Water Ionizer be installed in any kitchen or household?
Yes, the Respo Water Ionizer is designed for easy installation in most kitchens or households. It can be installed as a countertop or under-counter unit, depending on space availability and user preferences. Ensure that there is a nearby power outlet and water source for installation.

14. Does the Respo Water Ionizer require professional installation?
While professional installation is not mandatory, it may be recommended for users who are unfamiliar with plumbing or electrical work. The ionizer comes with detailed installation instructions and all necessary components for DIY installation. However, if you're unsure or uncomfortable with the process, hiring a professional installer can provide peace of mind.

15. Is the Respo Water Ionizer energy-efficient?

Yes, the Respo Water Ionizer is designed to be energy-efficient, consuming minimal power during operation. Its advanced technology and intelligent features optimize energy usage while still delivering high-quality ionized water. Additionally, the unit may feature power-saving modes or automatic shutoff functions to conserve energy when not in use.

16. Can I adjust the ionizer settings based on my water source?

Yes, the Respo Water Ionizer typically offers adjustable settings to accommodate different water sources and user preferences. You can customize factors such as pH level, water flow rate, and electrolysis strength to achieve the desired water quality and taste. Refer to the user manual for detailed instructions on adjusting settings.

17. How does the Respo Water Ionizer handle hard water or water with high mineral content?

The Respo Water Ionizer is designed to effectively ionize various types of water, including hard water with high mineral content. Its advanced filtration system and electrolysis process can help reduce mineral buildup and produce clean, ionized water with improved taste and health benefits. Regular maintenance, such as descaling and filter replacement, can further enhance performance in hard water conditions.

18. Can the Respo Water Ionizer remove contaminants from tap water?

While the Respo Water Ionizer is primarily designed to adjust the pH level of water through electrolysis, it may also help reduce certain contaminants and impurities found in tap water. Its builtin filtration system can trap sediment, chlorine, and other common water contaminants, improving overall water quality and taste. However, for comprehensive water purification, additional filtration or treatment methods may be required.

19. Is the Respo Water Ionizer suitable for commercial or industrial use?

While the Respo Water Ionizer is primarily intended for residential use, it may also be suitable for certain commercial or industrial applications where ionized water is desired. Its durable construction, customizable settings, and high-capacity filtration system make it adaptable to various settings, including offices, restaurants, and small businesses. However, for larger-scale applications, consider consulting with a water treatment specialist to ensure compatibility and optimal performance.

20. What is the warranty coverage for the Respo Water Ionizer?

The Respo Water Ionizer typically comes with a manufacturer's warranty that covers defects in materials and workmanship for a specified period. Warranty terms may vary depending on the model and region, so be sure to review the warranty documentation provided with your ionizer for specific coverage details and instructions on warranty claims. Additionally, consider registering your product with the manufacturer to activate warranty coverage and access additional support resources.

15. Additional Resources

1. Manufacturer's Website
Visit the official website of Respo Water Ionizer for product updates, user manuals, FAQs, and customer support resources. Check more at [www.respowater.com][https://www.respowater.com].

2. User Communities and Forums
Join online forums and user communities dedicated to water ionizers and health enthusiasts. Share experiences, tips, and troubleshooting advice with other users.

3. Scientific Research Papers
Explore scientific literature and research studies on the effects of ionized water on health, hydration, and various medical conditions. PubMed and Google Scholar are excellent sources for accessing peer-reviewed articles.

4. Health and Wellness Websites
Browse reputable health and wellness websites for articles, blog posts, and expert opinions on alkaline water, hydration, and healthy living practices. Check more at [www.aquatorionizer.com][https://www.aquatorionizer.com].

5. Books on Water Ionization
Expand your knowledge with books dedicated to water ionization, electrolysis, and the benefits of alkaline water. Look for titles authored by experts in the field of nutrition, wellness, and holistic health.

6. YouTube Channels and Videos
Watch educational videos and demonstrations on water ionizers, ionized water recipes, and user testimonials. Subscribe to the Respo channel on YouTube for insightful content.

7. Social Media Groups
Join social media groups and pages focused on water ionizers, alkaline water enthusiasts, and healthy lifestyle communities. Follow Respo on Linkedin and Facebook for updates and discussions.

8. Local Health Stores and Expos
Visit local health food stores, wellness centers, and expos to learn more about water ionizers, sample ionized water, and speak with knowledgeable staff members.

9. Customer Support Channels
Contact the manufacturer's customer support team for assistance with product inquiries, troubleshooting, warranty issues, and general guidance on using your Respo Water Ionizer. Check the mobile app, available on Google Play and Apple Store, for additional customer support features.

These additional resources offer valuable information and insights for users interested in learning more about water ionizers, ionized water, and their potential impact on health and wellness. Explore these resources to enhance your understanding and experience with your Respo Water Ionizer.

Respo

Burbuliukas ir Co, LTD
Pusaloto str. 76, 35135 Panevezys
Lithuania
+37063657541
info@respowater.com
www.respowater.com